Metal cylindrical shape inductive sensors **LR18X** series

Features

- Extended sensing distance;
- ASIC design, safe and reliable;
- Perfect choice for metallic targt detection;

Part number

DC 2 wires NO	LR18XBF08DLOY-E2	LR18XBN12DLOY-E2	DC 2 wires NC	LR18XBF08DLCY	LR18XBN12DLCY

Technical specifications

Mounting	Quasi -flush	Non-flush	Leakage current [Ir]	≤1mA	
Rated distance [Sn]	8mm	12mm	Circuit protection	Short-circuit, overload and reverse polarity	
Assured distance [Sa]	0…6.4mm	0…9.6mm	Output indicator	Yellow LED	
Dimensions	M18*63mm	M18*75mm	Ambient temperature	-25℃…70℃	
Output	NO/NC(depends on part number)		Ambient humidity	35-95%RH	
Supply voltage	10…30 VDC		Switching frequency [F]	400 Hz	200 Hz
Standard target	Fe 24*24*1tFe 36*36*1t		Voltage withstand	1000V/AC 50/60Hz 60S	
Switch-point drifts[%/Sr]	≤±10%		Insulation resistance	≥50MΩ (500VDC)	
Hysteresis range [%/Sr]	1…20%		Vibration resistance	10…50Hz (1.5mm)	
Repeat accuracy [R]	≤3%		Degree of protection	IP67	
Load current	≤100mA		Housing material	Nickel-copper alloy	
Residual voltage	≤6V		Connection type	M12 connector	

Dimensions

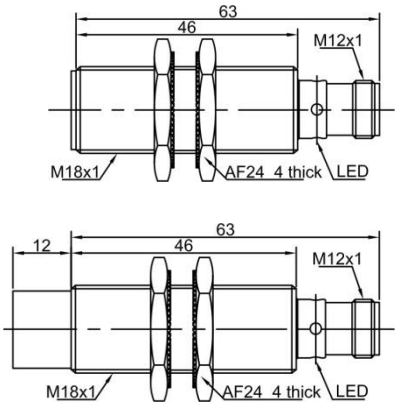
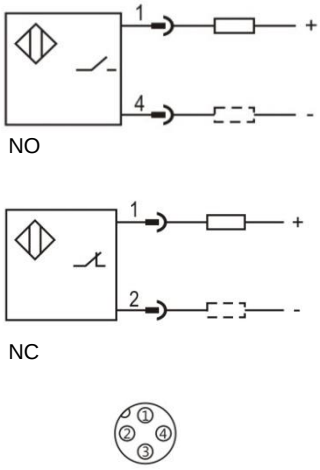
Wiring diagram